coldline

Client _____ Quantity _____

Project _____ Position _____

Modi Up Blast Chiller

Model: W10U **Cod:** W11103000011

Modi multifunction blast chiller 10 trays Up version, temperature range -40°+10°C. It is equipped with the functions: blast chilling, blast freezing, manual cycle. Plug-In refrigeration system with air condensation with R290 ecological refrigerant gas. 4,3" touch screen on the door and operating mode with customisable recipes, by time or with core probe. Adjustable ventilation 25-100%. Blast chilling yield +90/+3°C - 50 Kg; blast freezing yield +90/-18°C - 45 Kg. 5 heavy duty climatic class, hot gas defrost. 60 mm insulation thickness - HFO with high insulation performance and low environmental impact (CFC, HCFC, HFC free). Electronic expansion valve and anti-corrosion painted evaporator. Cushioned door with anti-odour system with Easily replaceable triple chamber magnetic gasket, core probe with screw connector and housing on the port. Exterior and interior AISI 304 stainless steel, fan unit and condenser cover removable without tools. Equipment: 10 GN1/1-EN60x40 pairs of slides. ModBus/RTU Rs485 connection as standard. Cosmo: wi-fi connection for remote monitoring via Cosmo App. When wired to Coldline counters and cabinets acts as a hub for remote monitoring of connected equipment.

Technical data

Top:	4 cm thickness
Gross capacity:	367 lt
Temperature range:	-40°+10°C
Ventilation range:	25% - 100%
Humidifier:	Not available
Refrigerant unit:	Plug-in
Yield +90/+3:	50 Kg
Yield +90/-18:	45 Kg
Climate class:	5
Cooling gas:	R290 (GWP=3)
Refrigerant Charge:	150g
Defrost:	Hot gas
Valve:	Electronic expansion valve
Dimensions:	780×800×1563 mm
Packing dimensions:	875×915×1826 mm
Voltage:	220-240 V - 50 Hz
Cooling capacity:	5546 W*
*:	Evap. -10°C Cond. +40°C
Noise:	69,8 dB

Features

Functions:	Blast chilling, shock freezing, continuous cycle
Standard equipment:	10 slides GN1/1, EN60x40
Control:	4,3" touch screen display with USB port
Doors:	Cushioned, with anti-odor system
Door gasket:	Magnetic, triple chamber and easily replaceable
Core probe:	Needle probe with 1 reading point, quick-release and easily replaceable
Insulation:	60 mm thickness - CFC/HCFC free
Exterior/interior finishing:	Exterior and interior AISI 304 stainless steel.
Inner corners:	Rounded for easy cleaning and ensuring maximum hygiene
Handle:	Stainless steel AISI 304, 2 mm thick
Racks and slides:	Stainless steel AISI 304, quick release
Feets:	AISI 304 stainless steel adjustable h 100/150 mm
Cosmo:	Wi-Fi remote control system

In order to constantly offer the best possible products we reserve the right to make changes on technical specifications without incurring any obligation for equipment previosly or subsequently sold.

Coldline Srl via Mattei, 38 - 35038 Torreglia, PD, Italy - P.I. 02628640282

coldline.it - info@coldline.it

Accessories and variants

RAL customisable colouring	4 Swivel and brake castors h 128 mm
Sonda al cuore a 3 punti di lettura	Stainless steel shelf GN1/1
Sonda al cuore riscaldata a 1 punto di lettura	Plastic coated shelf GN1/1
Reverse door opening from standard	Stainless steel shelf EN60x40
Alimentazione frequenza 60Hz	Plastic coated shelf EN60x40
Other special voltage	Pair of type L slides 398 mm GN-EN
Lowered foot h 55/70 mm	Sterilizing UV lamp

COSMO - wi-fi control

Cosmo is The Nice Kitchen's exclusive Wi-Fi technology that allows MODI blast chillers to be connected, updated and monitored from smartphones. MODI is also a Cosmo hub and allows remote supervision of the Coldline appliances connected to it. From the CosmoApp you can check the operating conditions of each machine and receive alerts in the event of abnormal operation.

Technical draw

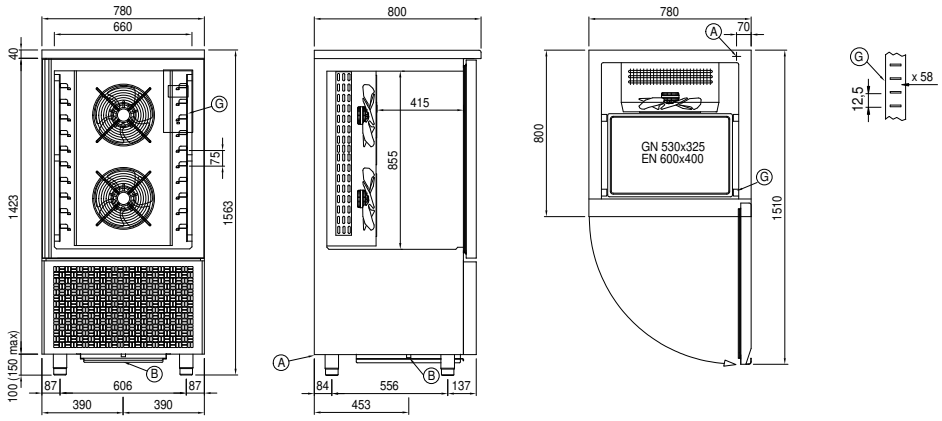

A: Power supply cable outlet **B:** Condensation water drain **G:** Racks pitch

In order to constantly offer the best possible products we reserve the right to make changes on technical specifications without incurring any obligation for equipment previosly or subsequently sold.